# Smart Motor Health Diagnostics

## A Real-Time Monitoring System with IMU, IR Sensor, and Free-RTOS Using Matlab and Simulink

By Aniket Fasate

# Central Idea

## Problem:

- Early-stage DC motor faults often go undetected with conventional monitoring.
- Small issues can escalate into major failures which causes costly repairs, downtime, and safety risks.

## Solution:

- Utilize IMU sensors, IR sensors, and a real time operating system (FreeRTOS) to continuously monitor the motor vibrations and rotational speed.
- Use machine learning to accurately track the remaining useful life (RUL) of the motor for predictive maintenance.

# Objectives and Scope:

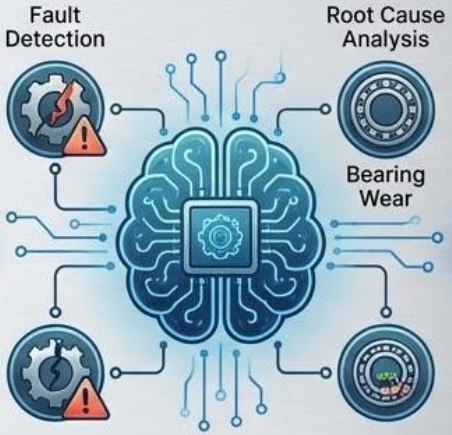


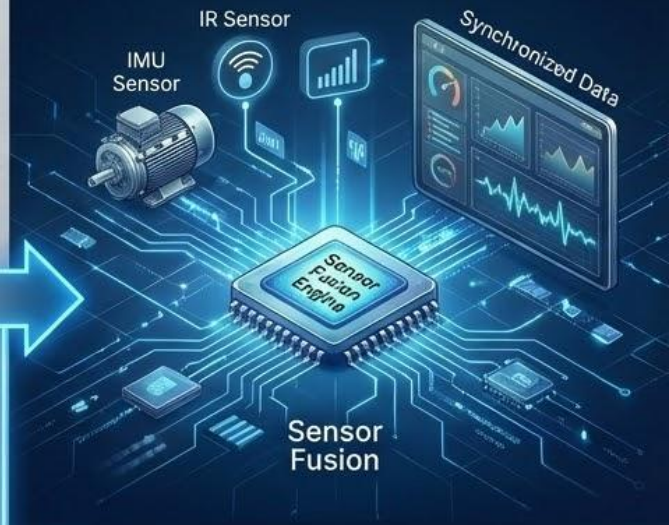


## Level 1: Goal

IMU sensor working and accurately tracking the motor's motion.

## Level 2: Goal

Evolving into a diagnostic system capable of detecting and identifying faults while suggesting potential root causes.

## Level 3: Goal

Achieving full sensor fusion by integrating both the IMU and the IR sensor for synchronized data collection.

# Progress: Experimental Setup and Collecting raw IMU data

Connected the ESP32 with the MPU-6050 and processed sensor data through Arduino/ESP32 code
Mounted motor system on top of a fan to collect more measurable vibration data

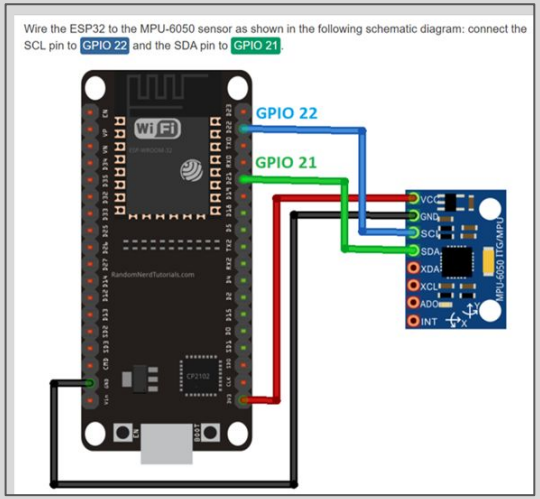


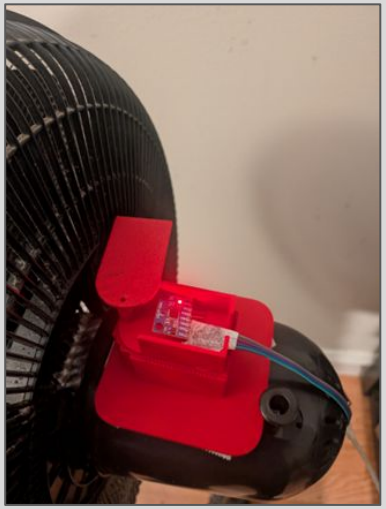

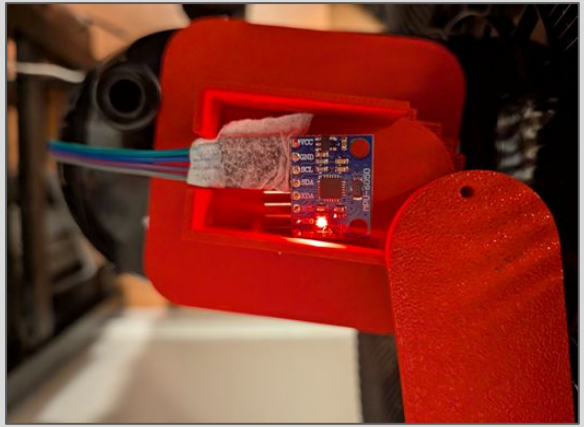

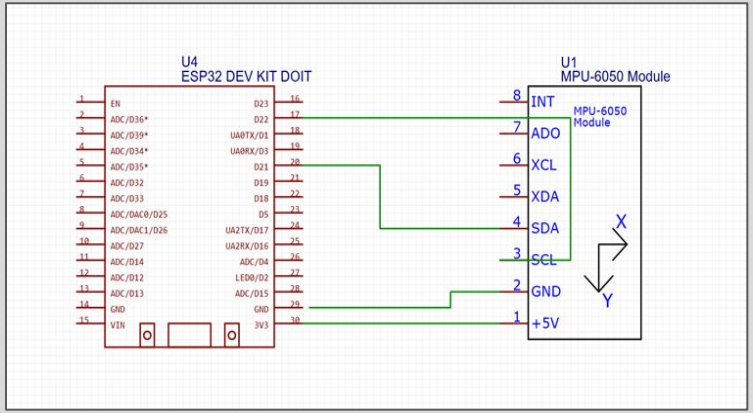

# Approach: Creating the Test Bench Housing

Several iterations for ergonomics and fit

| | Model 1: | Model 2: | Model 3: |
|---|---|---|---|
| Digital | 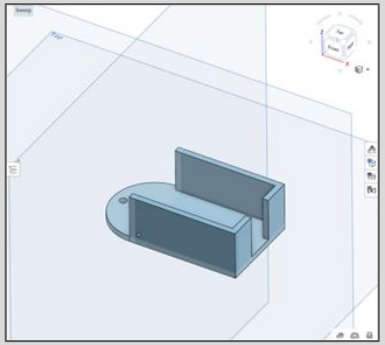 | 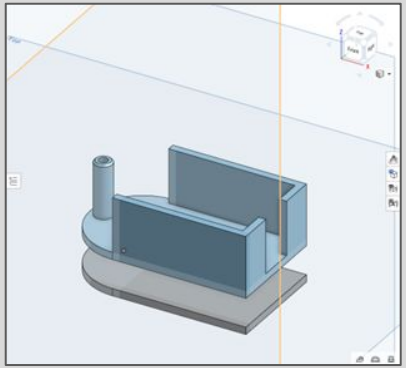 | 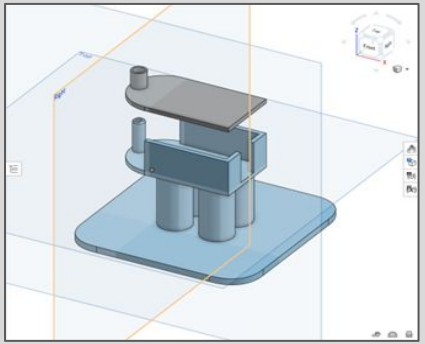 |
| Physical | | 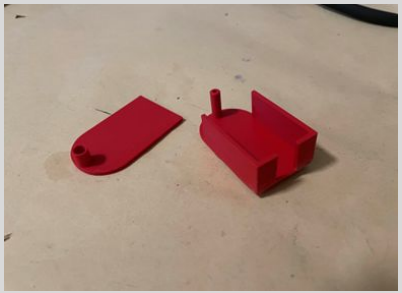 | |

**Approach**: Data acquisition and processing are orchestrated using the Free-RTOS kernel to enable reliable real-time operation.

**Core 0:** High-Priority Shigh-priority sensor acquisition task that reads MPU6050 accelerometer (Ax, Ay, Az), gyroscope (Gx, Gy, Gz), and temperature data at 100 Hz using the I2C interface, then sends each sample to a 2048-depth queue in a non-blocking, deterministic manner to ensure zero-jitter timing

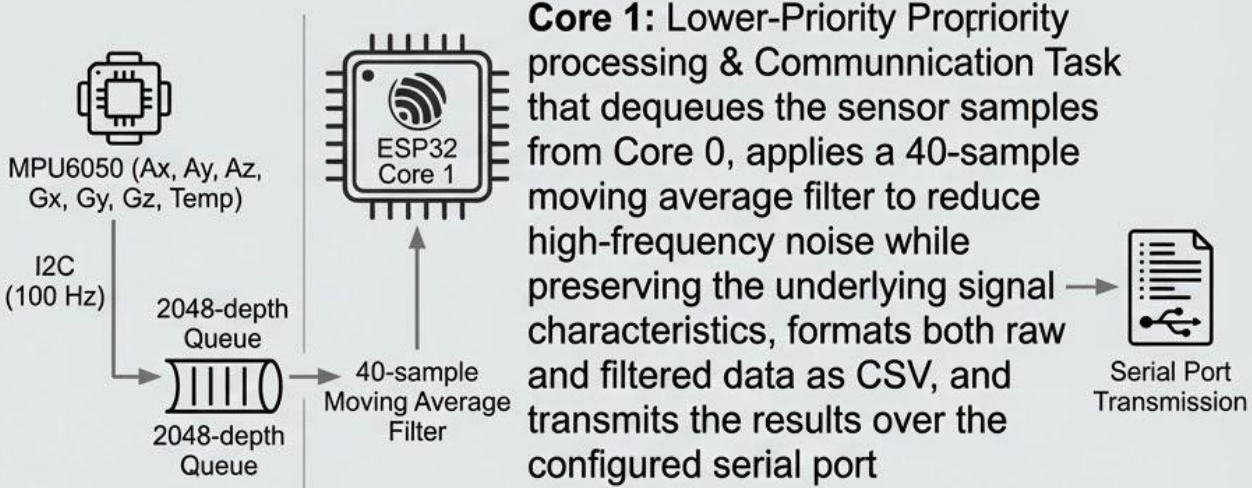


**Core 1:** Lower-Priority Proriority processing & Communnication Task that dequeues the sensor samples from Core 0, applies a 40-sample moving average filter to reduce high-frequency noise while preserving the underlying signal characteristics, formats both raw and filtered data as CSV, and transmits the results over the configured serial port

Reads sensor data, sends to queue in non-blocking, deterministic manner for zero-jitter timing.

Dequeues samples, applies filter to reduce noise, formats data, and transmits results.

**156,000+ samples** collected across 4 fault types

Healthy Data

34,592 Samples

Imbalance

37, 922 Samples

Misalignment

33,092 Samples

Bearing Fault

19,347 Samples

# Accelerometer

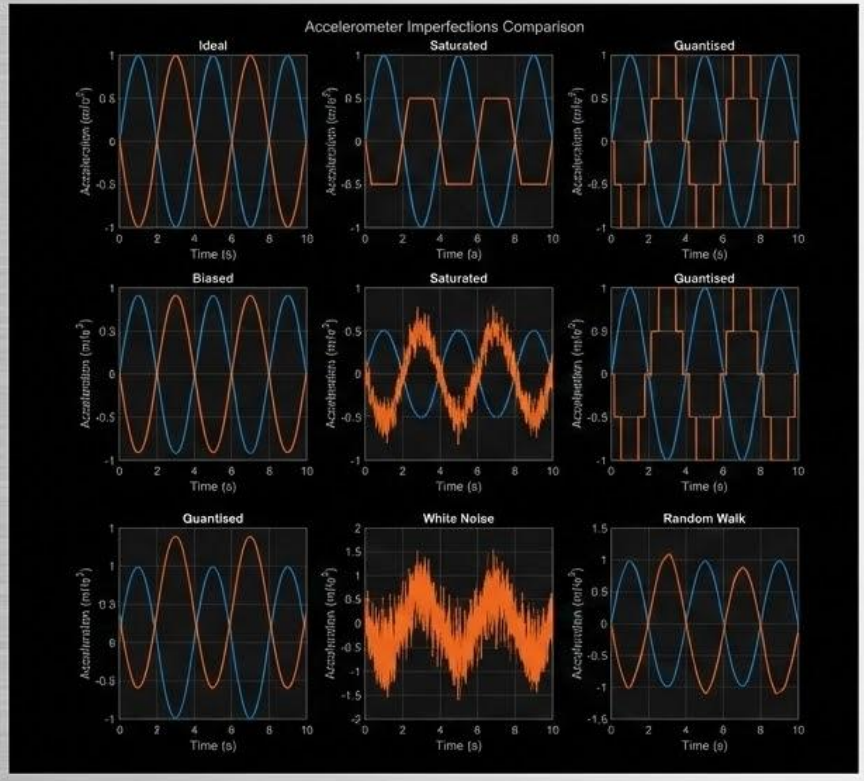


An accelerometer measures linear acceleration and vibration along three axes using tiny inertial masses and sensing elements. In smart motor health monitoring with an IMU, accelerometer data reveals imbalance, misalignment, bearing wear, and looseness through characteristic vibration patterns, enabling early fault detection and predictive maintenance before catastrophic failure.

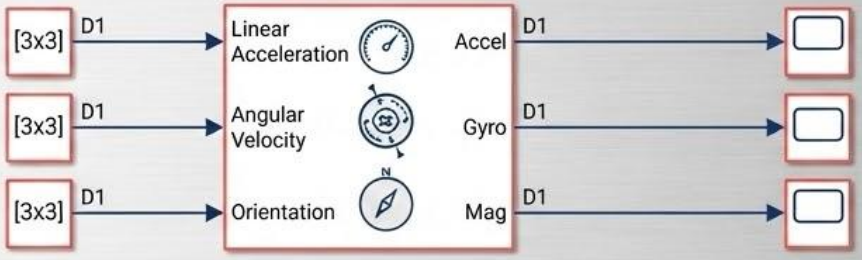

# Gyroscope

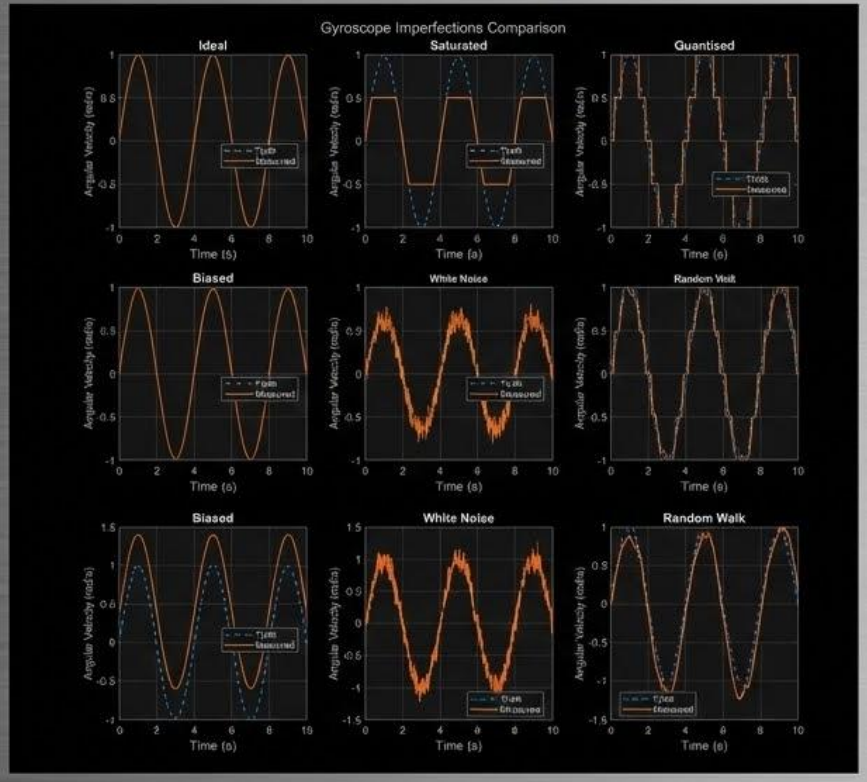


A gyroscope measures angular velocity and orientation about three axes using tiny vibrating structures or MEMS resonators. In a smart motor health monitoring IMU, gyroscope data captures rotational dynamics such as shaft speed fluctuations, torsional vibration, and misalignment-induced wobble, complementing accelerometer data to distinguish normal load changes from true mechanical faults and enabling more accurate diagnosis and predictive maintenance.

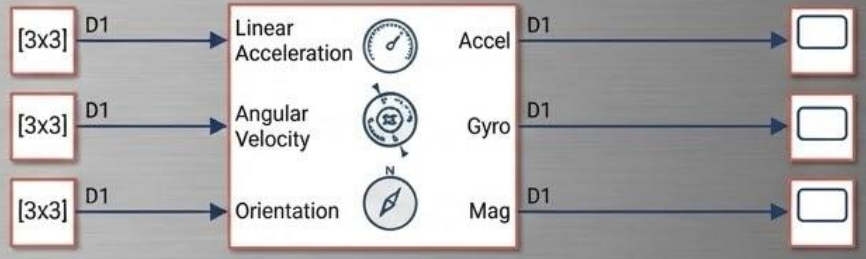

## Complete MATLAB/Simulink Pipeline

**Step 1: Data Generation** (MATLAB) ├─ motor_fault_IMU_generator_all.m └─ Creates synthetic vibration data for 4 fault types

**Step 2: Simulink Model Creation** (Simulink) ├─ simulink_motor_fault_setup.m ├─ Motor_Fault_System.slx (4 subsystems) └─ Processes acceleration & gyroscope signals

**Step 3: Simulation Execution** (Simulink) ├─ Runs all subsystems in parallel └─ Outputs magnitude calculations

**Step 4: Feature Extraction** (MATLAB) ├─ extract_features_simulink.m ├─ Sliding window approach (1000 samples, 50% overlap) └─ Generates 144 features per window

**Step 5:** Machine Learning (MATLAB) ├─ train_all_models.m ├─ K-Nearest Neighbors, Nearest Class Mean, Min Distance └─ 100% accuracy achieved

**Step 6:** Visualization (MATLAB) ├─ visualize_results.m ├─ compare_conditions.m └─ Comprehensive dashboards and plots

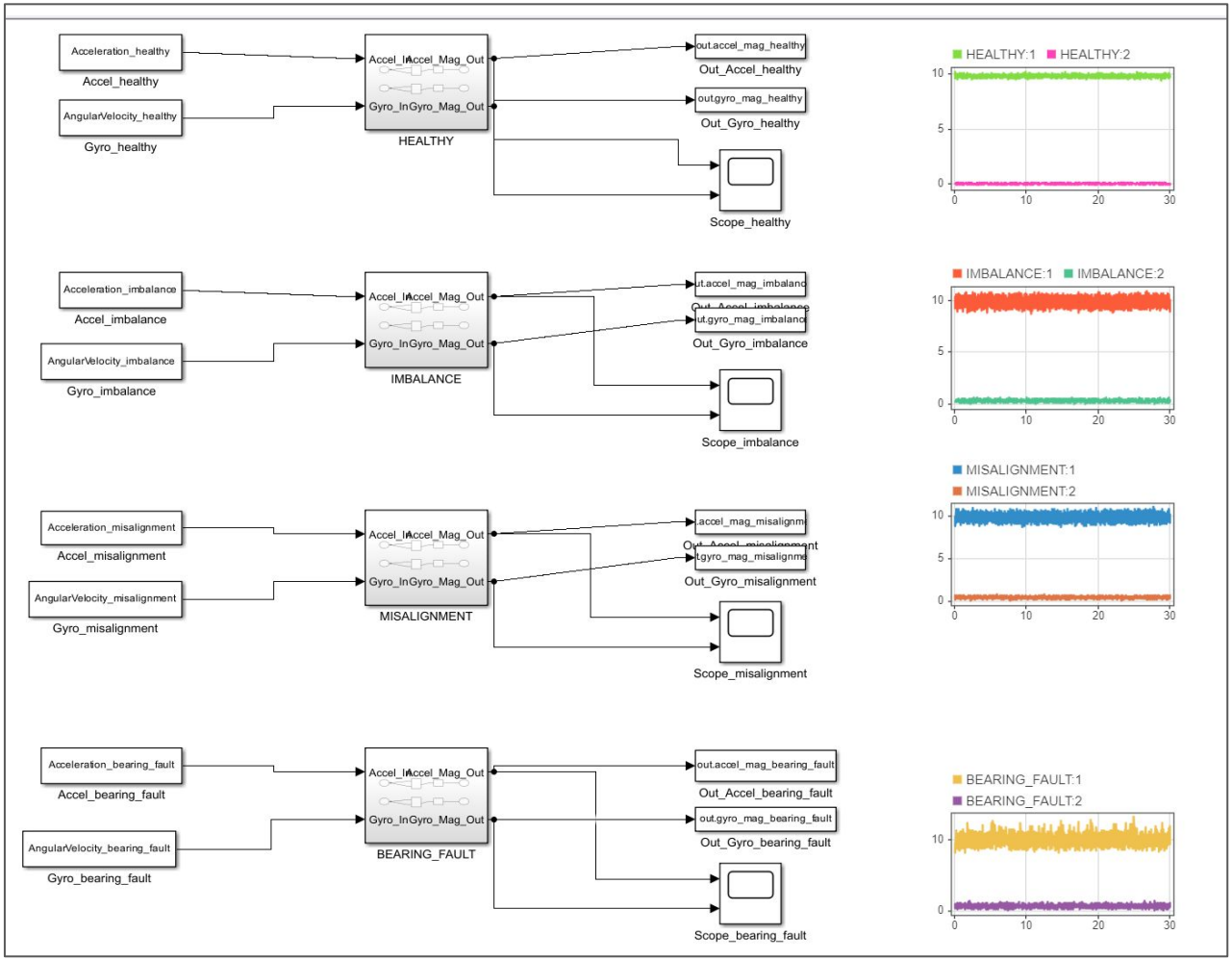
Acceleration_healthy
Accel_healthy
AngularVelocity_healthy
Gyro_healthy
Accel_In
Accel_Mag_Out
Gyro_In
Gyro_Mag_Out
HEALTHY
out.accel_mag_healthy
Out_Accel_healthy
out.gyro_mag_healthy
Out_Gyro_healthy
Scope_healthy
HEALTHY:1
HEALTHY:2
Acceleration_imbalance
Accel_imbalance
AngularVelocity_imbalance
Gyro_imbalance
IMBALANCE
Out_Gyro_imbalance
Scope_imbalance
IMBALANCE:1
IMBALANCE:2
Acceleration_misalignment
Accel_misalignment
AngularVelocity_misalignment
Gyro_misalignment
MISALIGNMENT
Out_Gyro_misalignment
Scope_misalignment
MISALIGNMENT:1
MISALIGNMENT:2
Acceleration_bearing_fault
Accel_bearing_fault
AngularVelocity_bearing_fault
Gyro_bearing_fault
BEARING_FAULT
out.accel_mag_bearing_fault
Out_Accel_bearing_fault
out.gyro_mag_bearing_fault
Out_Gyro_bearing_fault
Scope_bearing_fault
BEARING_FAULT:1
BEARING_FAULT:2

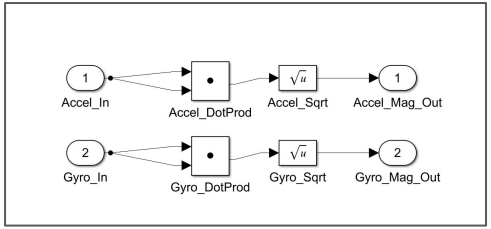
1
Accel_In
Accel_DotProd
Accel_Sqrt
Accel_Mag_Out
2
Gyro_In
Gyro_DotProd
Gyro_Sqrt
Gyro_Mag_Out

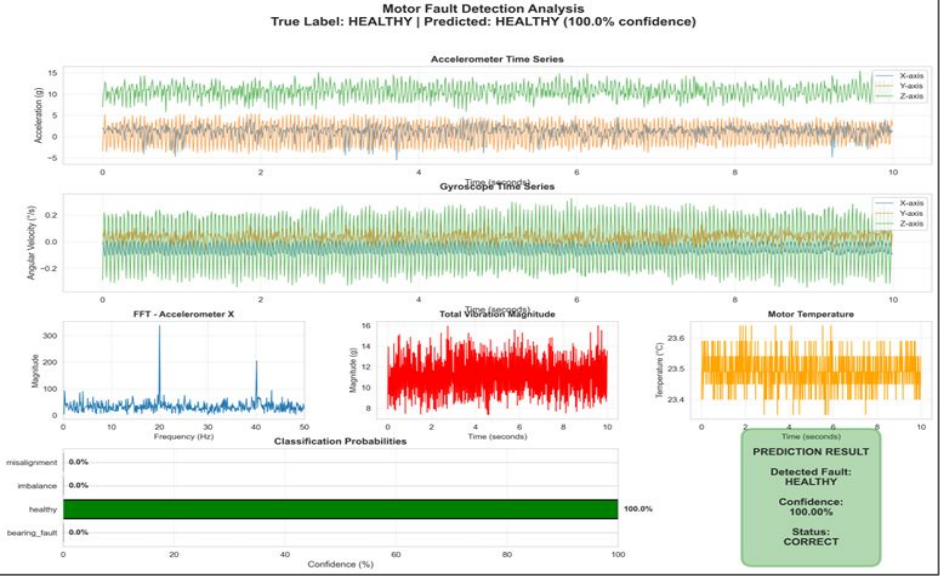
Motor Fault Detection Analysis
True Label: HEALTHY | Predicted: HEALTHY (100.0% confidence)
Accelerometer Time Series
Acceleration (g)
X-axis
Y-axis
Z-axis
Time (seconds)
Gyroscope Time Series
Angular Velocity (°/s)
FFT - Accelerometer X
Magnitude
Frequency (Hz)
Total Vibration Magnitude
Motor Temperature
Temperature (°C)
Classification Probabilities
misalignment 0.0%
imbalance 0.0%
healthy 100.0%
bearing_fault 0.0%
Confidence (%)
PREDICTION RESULT
Detected Fault: HEALTHY
Confidence: 100.00%
Status: CORRECT

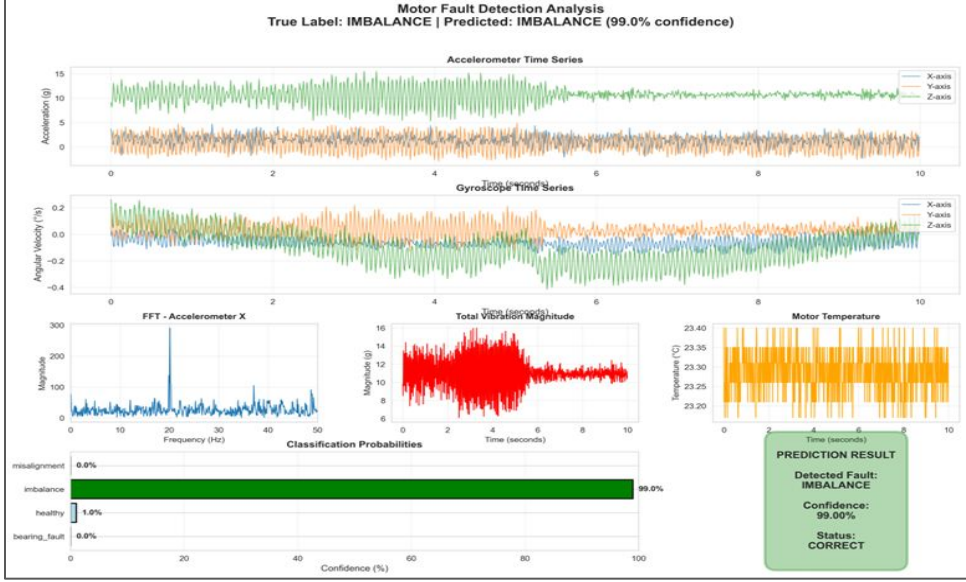
Motor Fault Detection Analysis
True Label: IMBALANCE | Predicted: IMBALANCE (99.0% confidence)
Accelerometer Time Series
Acceleration (g)
X-axis
Y-axis
Z-axis
Time (seconds)
Gyroscope Time Series
Angular Velocity (°/s)
FFT - Accelerometer X
Magnitude
Frequency (Hz)
Total Vibration Magnitude
Motor Temperature
Temperature (°C)
Classification Probabilities
misalignment 0.0%
imbalance 99.0%
healthy 1.0%
bearing_fault 0.0%
Confidence (%)
PREDICTION RESULT
Detected Fault: IMBALANCE
Confidence: 99.00%
Status: CORRECT

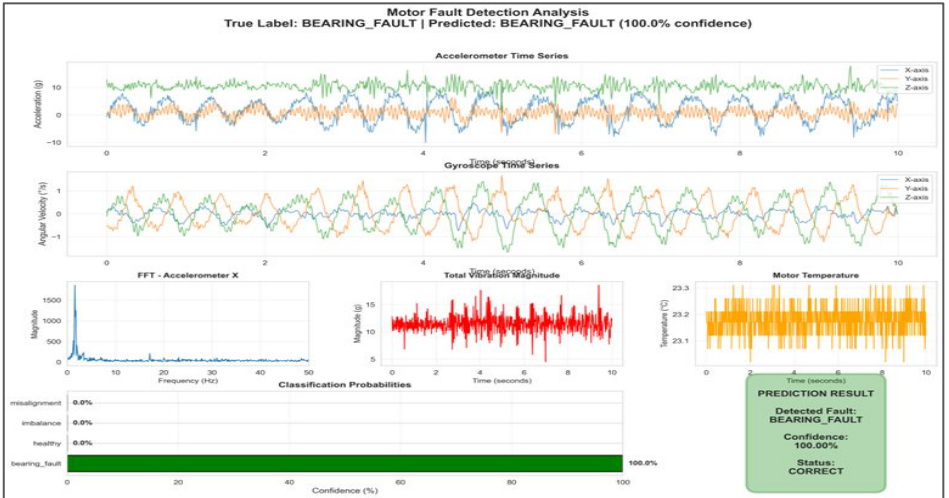
Motor Fault Detection Analysis
True Label: BEARING_FAULT | Predicted: BEARING_FAULT (100.0% confidence)
Accelerometer Time Series
Acceleration (g)
X-axis
Y-axis
Z-axis
Time (seconds)
Gyroscope Time Series
Angular Velocity (°/s)
FFT - Accelerometer X
Magnitude
Frequency (Hz)
Total Vibration Magnitude
Motor Temperature
Temperature (°C)
Classification Probabilities
misalignment 0.0%
imbalance 0.0%
healthy 0.0%
bearing_fault 100.0%
Confidence (%)
PREDICTION RESULT
Detected Fault: BEARING_FAULT
Confidence: 100.00%
Status: CORRECT

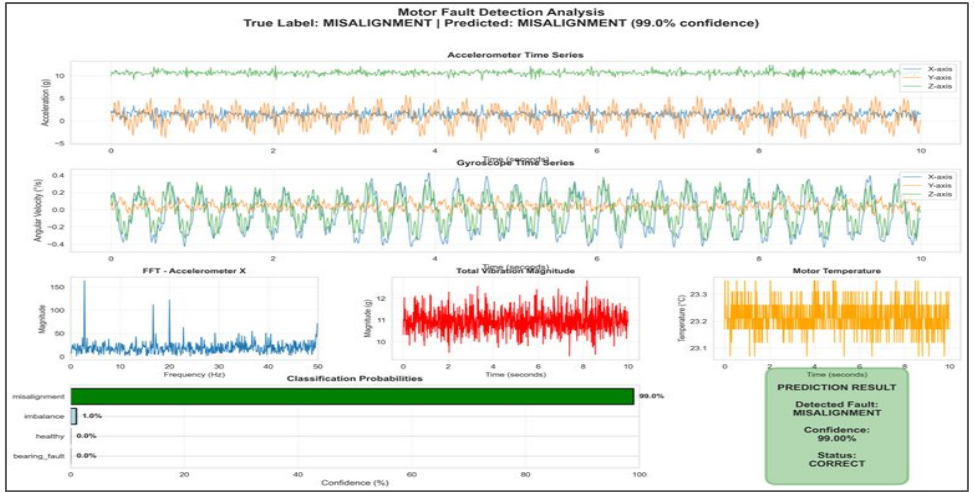
Motor Fault Detection Analysis
True Label: MISALIGNMENT | Predicted: MISALIGNMENT (99.0% confidence)
Accelerometer Time Series
Acceleration (g)
X-axis
Y-axis
Z-axis
Time (seconds)
Gyroscope Time Series
Angular Velocity (°/s)
FFT - Accelerometer X
Magnitude
Frequency (Hz)
Total Vibration Magnitude
Motor Temperature
Temperature (°C)
Classification Probabilities
misalignment 99.0%
imbalance 1.0%
healthy 0.0%
bearing_fault 0.0%
Confidence (%)
PREDICTION RESULT
Detected Fault: MISALIGNMENT
Confidence: 99.00%
Status: CORRECT

# Dynamic Health Monitor Dashboard

## System Overview

Number of Systems and their current states(ON/OFF)

## Sensor Data Stream

### 3 Axis Accelerometer data

Ax 21.190

Ay 23.290

Az 0.000

### Faults

1) Imbalance Fault
2) Bearing Fault
3) Misalignment Fault

### 3 Axis Gyroscope data

Gx 23.400

Gy 23.900

Gz -0.310

### Frequency Control

1) 100Hz
2) 500hz
3) User Input

# Next Steps:

## Adding Fan and IR sensor components

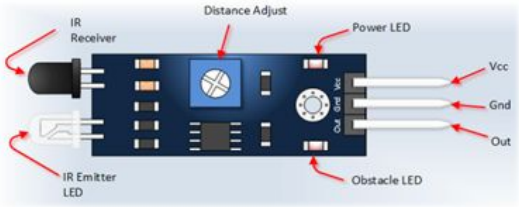


| Pin, Control Indicator | Description |
|---|---|
| Vcc | 3.3 to 5 Vdc Supply Input |
| Gnd | Ground Input |
| Out | Output that goes low when obstacle is in range |
| Power LED | Illuminates when power is applied |
| Obstacle LED | Illuminates when obstacle is detected |
| Distance Adjust | Adjust detection distance. CCW decreases distance. CW increases distance. |
| IR Emitter | Infrared emitter LED |
| IR Receiver | Infrared receiver that receives signal transmitted by Infrared emitter. |

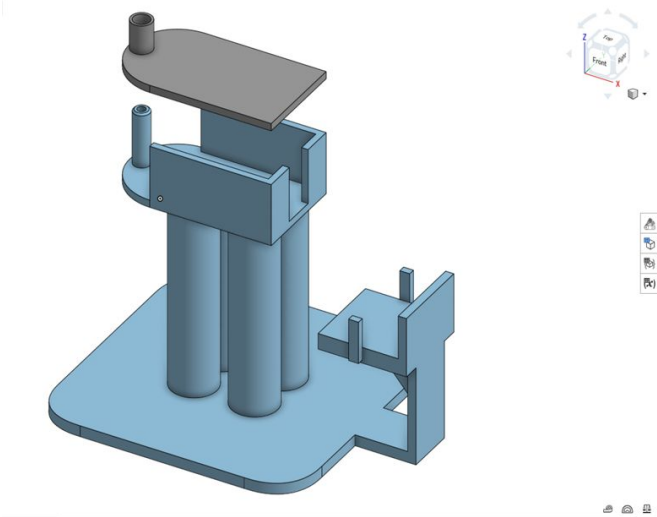

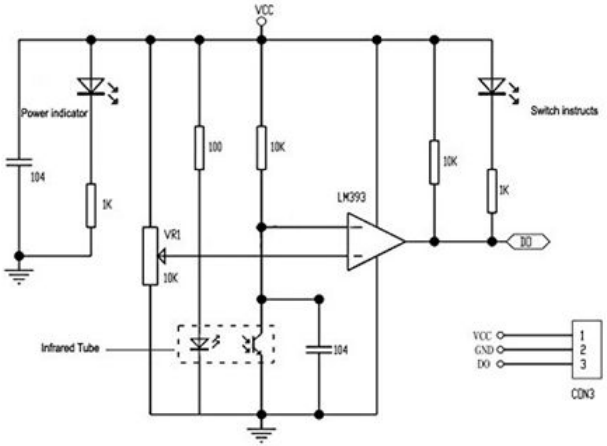

# Learning Curve

## Several Practical Challenges

### 1

**Multiple 3D-Printed Sensor Mounts**

Iterative design for ergonomics, fit, and stable data acquisition.

### 2

**Small DC Motor & Standing Fan Motor**

Testing limitations with various motor types and scales.

### 3

**Replicating Fault Conditions**

Generating controlled and measurable fault data in a lab setting.

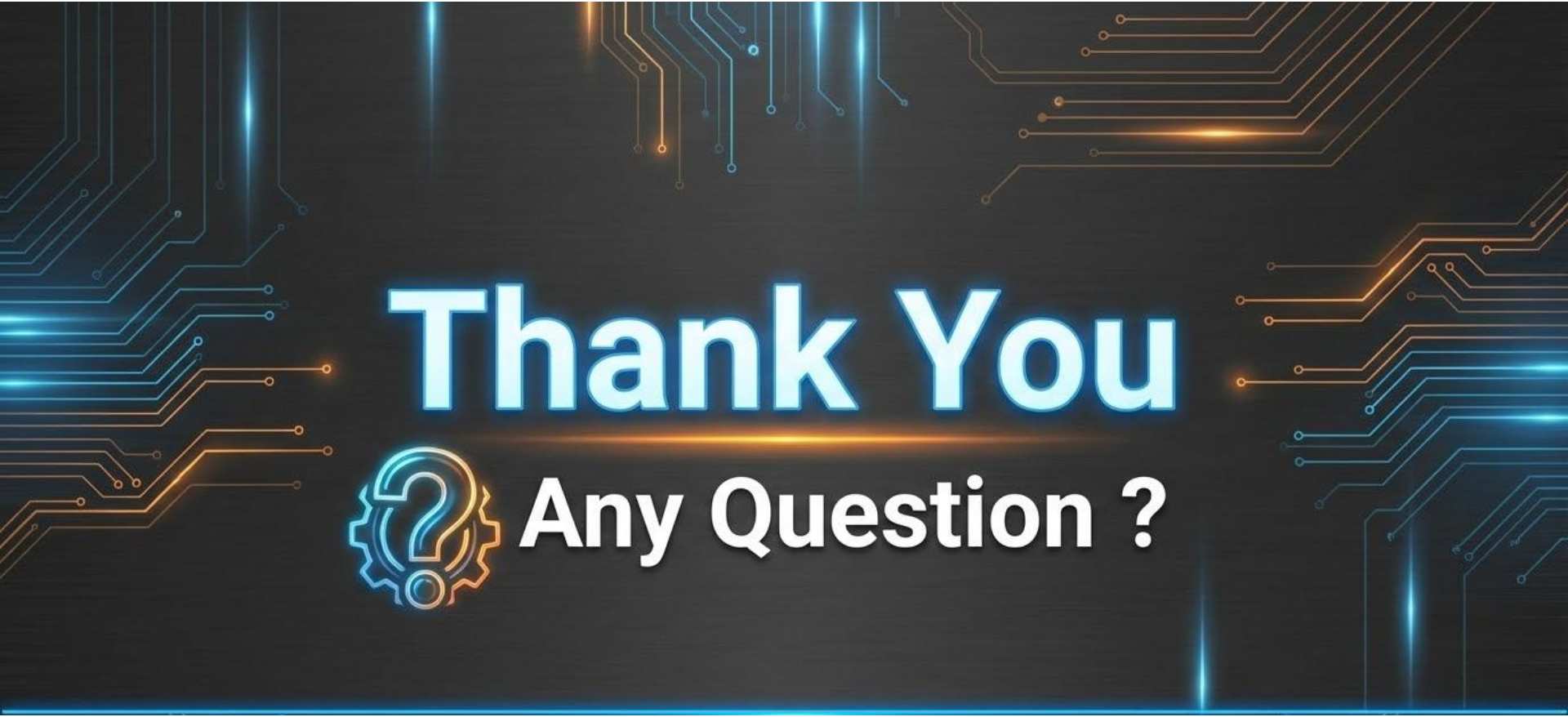


Github: [AniketFasate27/Robot_Sensing_Navigation]

Medium Profile: Aniket Fasate – Medium

**Professional Profile:** iPortfolio Bootstrap Template - Index

1) **Over the Air:** YouTube vide0: OTA with Firmware as well as Sketch file Update
   Medium Article link: "Seamless ESP32 Upgrades: A Guide to OTA Firmware and Sketch Updates" | by Aniket Fasate | Engineering IoT | Medium

2) **FreeRTOS:**
   Medium Article: "Real-Time Magic: Using Free-RTOS to Supercharge Your ESP32 Projects" | by Aniket Fasate | Embedded & Connected | Medium
3) **Wireless and Cellular RF**: Article link: "ESP-NOW: A Game Changer for ESP32 Mesh Networks and Sensor Applications" | by Aniket Fasate | Engineering IoT | Medium

4) **Mesh Network Topology:** "ESP-NOW: A Game Changer for ESP32 Mesh Networks and Sensor Applications" | by Aniket Fasate | Engineering IoT | Medium
5) "Introduction to Wi-Fi Microcontrollers and Their Role in the IoT Revolution" | by Aniket Fasate | Engineering IoT | Medium